PT-L Pressure Transducer User Manual

Amplified Output Series

BINMASTER®

Doc #9004211
Rev A2, 08/16

Table of Contents

Introduction

Thank you for purchasing a PT-L amplified series pressure transmitter from BinMaster. We appreciate your business! Please take a few minutes to familiarize yourself with your PT-L and this manual.

The PT-L series of pressure transmitters offers economical reliability over a wide range of pressures. The small size, integrated electronics, wide operating temperature range, and durability, make the PT-L the perfect instrument with an amplified output signal for static and dynamic pressure measurements.

Reading your label

The PT-L instrument comes with a label that includes the instrument's model number, part number, serial number, and a wiring pinout table. Please ensure that the part number and pinout table on your label match your order.

Warranty and Warranty Restrictions

BinMaster warrants this product against defects in material and workmanship for two (2) years according to the following terms;

1.) This warranty extends to the original purchaser only and commences on the date of original purchase.

2.) BinMaster's sole obligation under said warranty is to repair, or at its option replace the defective parts. The buyer shall have no other remedy. All special, incidental and consequential damages are excluded. The buyer must deliver the product under warranty prepaid to the factory. BinMaster's obligation is limited to the cost of material and labor to repair or replace, and does not include transportation expenses.

3.) This warranty shall be voided, in our sole judgment, by alterations of equipment except by BinMaster, or tampering with, improper installation or maintenance, accident or misuse, or act of God. This warranty expressly excludes all damage to the product resulting from careless or neglectful packaging or transportation. The warranty does not extend to repairs made necessary by normal wear.

4.) This warranty is in lieu of all other warranties, expressed or implied including any implied warranties or merchantability or fitness for particular purpose. No employee, agent, franchise dealer or other person is authorized to give any warranties of any nature on behalf of BinMaster.

5) BinMaster shall in no event be responsible for any warranty work done without first obtaining BinMaster's written consent.

6) Except as provided herein, BinMaster shall have no liability, loss or damage caused or alleged to be caused directly or indirectly by this equipment.

7) This warranty gives the buyer specific legal rights, and you may also have other rights which vary from state to state.

8) For service, please call 402-434-9102.

Chapter 1: Specifications and Options

- **Dimensions**

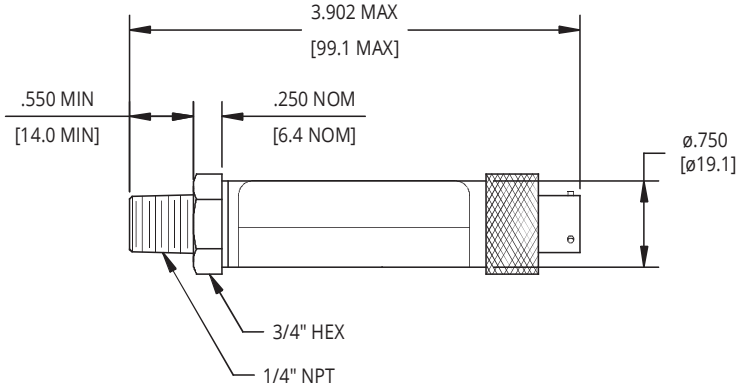

4 or 6 Pin Bayonet

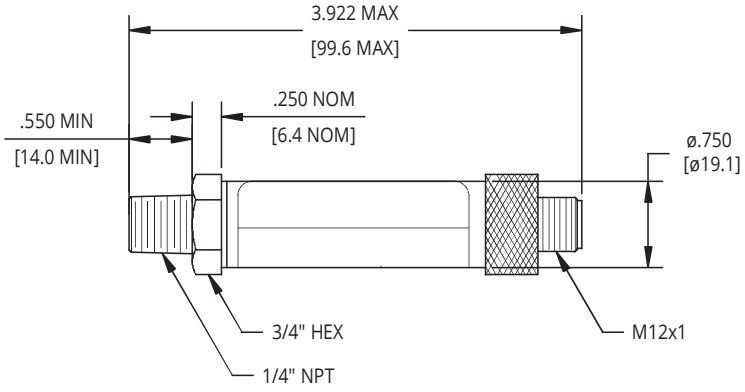

4 Pin M12

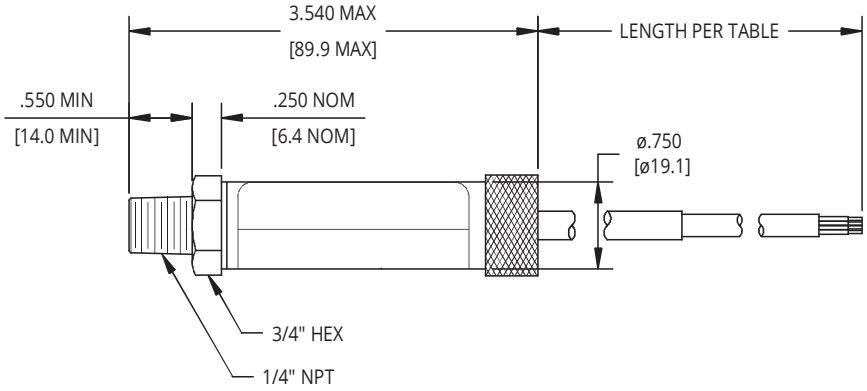

Pigtail

- ## Specifications

Performance

Pressure Ranges	0 to 10K PSIS
Analog Output	4-20mA, 0/1-5VDC, 1-6VDC, 0/1-10VDC
Over Pressure	1.5X Full Scale or limit of fitting, whichever is less
Burst Pressure	3.0X Full Scale or limit of fitting, whichever is less
Life span	10 million cycles minimum

Accuracy

Linearity, Hystereses & Repeatability	±0.25% of Full Scale (BFSL) up to ±0.1% of Full Scale
Thermal Zero Shift	±0.036% FSO/°C (±0.02% FSO/°F)
Thermal Span Shift	±0.036% FSO/°C (±0.02% FSO/°F)
1 Year Stability	15-5 SS: ±0.5% FSO
	17-4 SS: ±0.5% FSO
	316L SS: ±1% FSO
Zero Balance Adjust	±1% FSO

Environmental

Standard Compensated Temperature	0 to 130°F	(-17 to 54°C)
Extended Compensated Temperature	-40 to 180°F	(-40 to 82°C)
Extended Compensated Temperature	0 to 185°F	(-17 to 85°C)
Humidity	0 to 90%	

Electrical

Supply Voltage (at sensor)	4-20 mA:	10-36 VDC
	0 or 1 to 5 VDC:	9-33 VDC
	1 to 6 VDC:	9-33 VDC
	0 or 1 to 10 VDC:	14-33 VDC
Input Current	4-20 mA:	3-30 mA max
	0 or 1 to 5 VDC:	15 mA max
	1 to 6 VDC:	15 mA max
	0 or 1 to 10 VDC:	15 mA max
Protection	Reverse Polarity	

Masterials of Construction

Materials	15-5, 17-4, or 316L Stainless Steel

Mechanical

Process Connection	See Model Number Configurator for complete list

• Model Number Configurator

Part Number: PT- ____ - C - ____ - ____ - ____ - ____ - ____ - ____ - ____ - ____ - ____ - ____ - ____
A B C D E F G H I J K L

A. Operation

☐ **L1**	4-20 mA	☐ **L11**	1-6 VDC
☐ **L3**	0-5 VDC	☐ **L12**	1-5 VDC
☐ **L10**	0-10 VDC	☐ **L21**	1-10 VDC

B. Common Pressure Ranges - PSI*

☐ **5**	☐ **50**	☐ **200**	☐ **1000**	☐ **5000**
☐ **15**	☐ **60**	☐ **300**	☐ **2000**	☐ **10000**
☐ **30**	☐ **100**	☐ **500**	☐ **3000**	

*Other ranges available. Please consult factory.

C. Unit of Measure

☐ **PSI**▲	☐ **kPa**	☐ **inHg**
☐ **bar**	☐ **inH_2O**	☐ **$kgcm^2$**
☐ **mbar**	☐ **mmHg**	☐ **fsw**

D. Pressure Type

☐ **G**	Gauge	☐ **A**	Absolute
☐ **CG**	Compound Gauge	☐ **S**	Sealed
☐ **V**	Vac		

E. Electrical Connection

Mating connector sold separately

- ☐ **E1** 6-pin circular
- ☐ **E3** 4-pin bayonet
- ☐ **E4** 4-pin M12 Micro connector
- ☐ **E5**▲ Pigtail with cable (specify length below)
- ☐ **E17** 6-pin bayonet

F. Electrical Cable Length

☐ ___ Number represents cable length, in 5-ft increments, included on E5 pigtail option above.
(ex. E5-10 represents pigtail with 10 ft. cable)

Note: ▲Indicates this option is standard.

G. Process Connection

☐ **P0**▲	1/4-18 NPTM	☐ **P16**	PT 1/4 (BSPP) male
☐ **P4**	7/16 SAE male flush mount	☐ **P22**	G3/8 (3/8 BSPP) male
☐ **P5**	1/4-18 NPTF	☐ **P23**	G1/2 (1/2 BSPP) male
☐ **P7**	7/16-20 SAE male	☐ **P30**	High Pressure Sno Trik (M-250C, Autoclave male)
☐ **P14**	1/8-27 NPTM	☐ **P54**	7/16-20 UNJF-3A male w/ cone

H. Accuracy

1-5,000 PSI

- ☐ **N0***▲ ±0.25%
- ☐ **N1*** ±0.25% with NIST certification
- ☐ **N2** ±0.1% with NIST certification

*Note: ±0.25% available at 10,000 psi for 4-20 mA output only.

10,000 PSI

- ☐ **N12** ±0.5%
- ☐ **N13** ±0.5% with NIST certification

I. Materials

- ☐ **M0** 15-5 SS (available on ranges 1,000 psi and above)
- ☐ **M1**▲ 316L SS (available on ranges up to 5,000)
- ☐ **M2** 17-4 SS (available on ranges 1,000 psi and above)

J. Vibration

- ☐ **V0**▲ Standard
- ☐ **V1** High (not available with K0)

K. Can Assembly

- ☐ **K0**▲ Knurl
- ☐ **K1** Tamper resistant with Loc-Tite
- ☐ **K2** Tamper resistant with weld
- ☐ **K3** Weld can to fitting and connector

L. Temperature

- ☐ **S0**▲ Standard: 0º - 130ºF (-17º - 54ºC)
- ☐ **S1** Extended: -40º - 180ºF (-40º - 82ºC)
- ☐ **S4** Extended: 0º - 185ºF (-17º - 85ºC)

• Electrical Connectors, Pinout Table, and Supply Power Table

PT-L Pin Out Table

		4-20 mA	0/1-5/6 VDC	0/1-10 VDC
6 Pin Circular	A	+ Excitation	+ Excitation	+ Excitation
	B	- Excitation	+ Output	+ Output
	C	N/C	- Output	- Output
	D	N/C	-Excitation	-Excitation
	E	N/C	N/C	N/C
	F	N/C	N/C	N/C

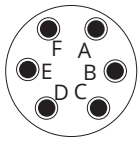

6 Pin Circular Connector

6 Pin Bayonet	A	+ Excitation	+ Excitation	+ Excitation
	B	- Excitation	+ Output	+ Output
	C	N/C	- Output	- Output
	D	N/C	- Excitation	- Excitation
	E	N/C	N/C	N/C
	F	N/C	N/C	N/C

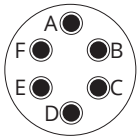

6 Pin Bayonet Connector

4 Pin Bayonet	A	+ Excitation	+ Excitation	+ Excitation
	B	- Excitation	+ Output	+ Output
	C	N/C	- Output	- Output
	D	N/C	- Excitation	- Excitation

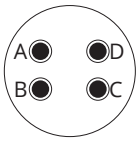

4 Pin Bayonet Connector

4 Pin M12	1	+ Excitation	+ Excitation	+ Excitation
	2	- Excitation	+ Output	+ Output
	3	N/C	- Output	- Output
	4	N/C	- Excitation	- Excitation

4 Pin M12 Micro Connector

Pigtail	Red	+ Excitation	+ Excitation	+ Excitation
	Grn	N/C	+ Output	+ Output
	Wht	N/C	- Output	- Output
	Blk	- Excitation	- Excitation	- Excitation

N/C indicates no connection
For alternate pinouts, please consult factory

PT-L Series Supply Power Table

	4-20 mA	0/1-5/6 VDC	0/1-10 VDC
Power Supply	10-36 VDC	9-33 VDC	14-33 VDC

- ## Wiring Diagrams

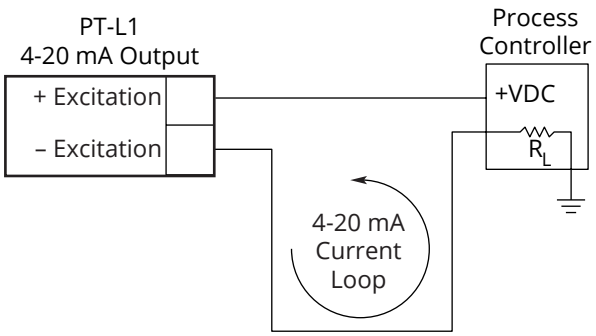

4-20 mA Output Wiring Diagram

The 4-20 mA PT-L1 is a 2 wire, loop powered transducer/transmitter. A voltage of between 10 and 36 VDC must be maintained at this connection. Completion of the earth or system ground is recommended for proper circuit protection.

Power supply voltage must be sufficient to maintain a minimum of 9 VDC at the transducer/transmitter terminals after "dropping" voltage across R_L at full scale current (20 mA). Example: If R_L = 250 Ω then "drop" is 0.02 Amps X 250 Ω = 5 volts. Therefore power supply minimum is 5 V + 10 V = 15 V.

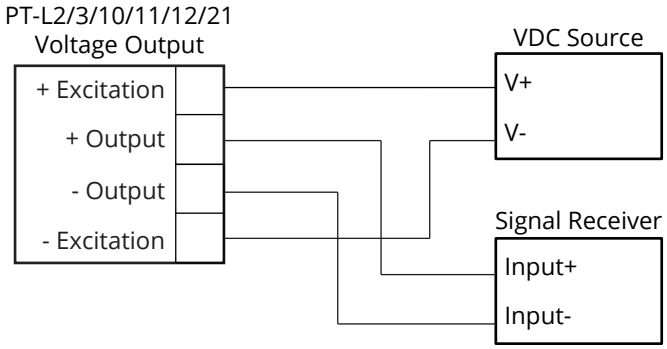

Voltage Output Wiring Diagram

Chapter 2: Installation and Removal Procedures and Notes

- ## Tools Needed

  - Wrench sized appropriately for your PT-L's process connection (usually 3/4").
  - Thread tape or sealant compound for threaded connections.

• Mounting Instructions

Mounting your pressure transducer is easy if you follow a few simple steps:

- Never over-tighten the sensor. This can compress the diaphragm, changing how it reacts to pressure. In all cases, tighten the sensor as little as possible to create an adequate seal. On straight threads, tighten only until you feel the o-ring compress - making sure you don't damage or extrude the o-ring.
- Always use thread tape or sealant compound on tapered threads. Wrap thread tape in the opposite direction of the threads so it does not unravel as you screw the sensor into place. Unraveling can cause uneven distribution and seal failure. For straight threads use an o-ring.
- Always start screwing in your sensor by hand to avoid cross-threading. Thread failure can be a problem if you damage threads by over-tightening them or by crossing threads.

• Electrical Installation

- Check the pinout table on your PT-L against your order.
- Check that your electrical system wiring matches the pinout table on your PT-L.
- For instruments with connectors, make the connection. For instruments with pigtails, run the cable to a junction box in a suitable location to connect to your system.

• Removal Instructions

Removing your PT-L from service must be done with care. It's easy to create an unsafe situation, or damage your sensor, if you are not careful to follow these guidelines:

- Make sure the pressure is completely removed from the line or vessel where your sensor is installed. Follow any and all procedures for safely isolating any media contained inside the line or vessel.
- Remove the sensor with an appropriately sized wrench (per your process connection).
- Carefully clean the sensor's fitting and diaphragm of any debris (see General Care) and inspect for damage.
- Store your sensor in a dry place, at a temperature between -40° F and 180° F.

DANGER: Removing your PT-L Pressure Transmitter while there is still pressure in the line could result in injury or death.

Chapter 3: Maintenance

• General Care

Your PT-L series pressure transmitter is very low maintenance and will need little care as long as it was installed correctly. However, in general, you should:

- Keep the transmitter and the area around it generally clean.
- Avoid applications for which the transmitter was not designed, such as extreme temperatures, contact with incompatible corrosive chemicals, or other damaging environments.
- Inspect the threads whenever you remove the transmitter from duty or change its location.
- Avoid touching the diaphragm. Contact with the diaphragm, especially with a tool, could permanently shift the output and ruin accuracy.
- Clean the diaphragm or the diaphragm bore with extreme care. If using a tool is required, make sure it does not touch the diaphragm.

IMPORTANT: Any contact with the diaphragm can permanently damage the sensor. Use extreme caution.

NOTE: Non-sealed sensors have a small vent hole that must not be covered or closed. Covering, closing, or otherwise sealing this hole will prevent proper sensor operation.

• Zero Trimming

If it becomes necessary to re-adjust “zero”, this can be accomplished by adjusting the trimpot marked “Z”. An ideal zero is indicated by an output of 4 mA, 0 VDC or 1 VDC, depending on your model.

- Remove the knurled nut. If your transducer does not have a knurled nut, your transducer can not be field adjusted. You can return the transducer to the factory for repair and/or adjustment.
- Carefully remove the connector or pigtail from the body of the transducer and pull it all the way out so that the amplifier board is exposed. Do not over extend the ribbon cable that attaches the amplifier board to the sensor.
- Reconnect the device with the loop powered circuit and have access to a method of monitoring the output of the transducer.
- Ensure that the transducer is at 0 psig or 0 psia (vacuum if absolute).
- Using a jewelers screwdriver or suitable instrument, adjust the “Z” pot (See Figure 3.1) until you have zero output.

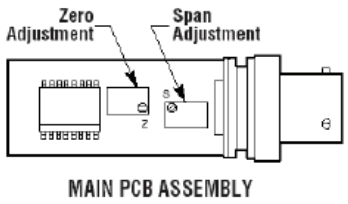

Figure 3.1

IMPORTANT: Do not make changes to the Span adjustment (the "S" pot to the right, see Figure 3.1) as part of the zero trimming. The Span should only be changed as part of the recalibration of a transducer with a known pressure source.

• Re-Calibration

This procedure requires a known pressure source of at least ±0.1% accuracy in order to fully utilize the accuracy potential of the PT-L. (If not available, you can return it to the factory for re-calibration.)

- Ensure that the transducer is at 0 psig or 0 psia (vacuum if absolute), and adjust zero as per instructions for zero trimming.
- Apply full scale pressure to the pressure port and adjust the Span ("S") pot (on the right of Figure 3.1) until the full scale signal is reached.
- Re-check zero and re-adjust the zero ("Z") pot if required
- Repeat previous two steps until no further adjustment is required.

NOTE: You may also return the PT-L to the factory for repair and/or adjustment.

• Repair and Returns

Should your PT-L series pressure transmitter require service, please contact the factory. We will issue you a Return Material Authorization (RMA) number with instructions.

- Phone: 402-434-9102
- Email: info@binmaster.com

Please have your PT-L's part number and serial number available. See Warranty and Warranty Restrictions for more information.

BINMASTER®

402-434-9102 • www.binmaster.com • info@binmaster.com