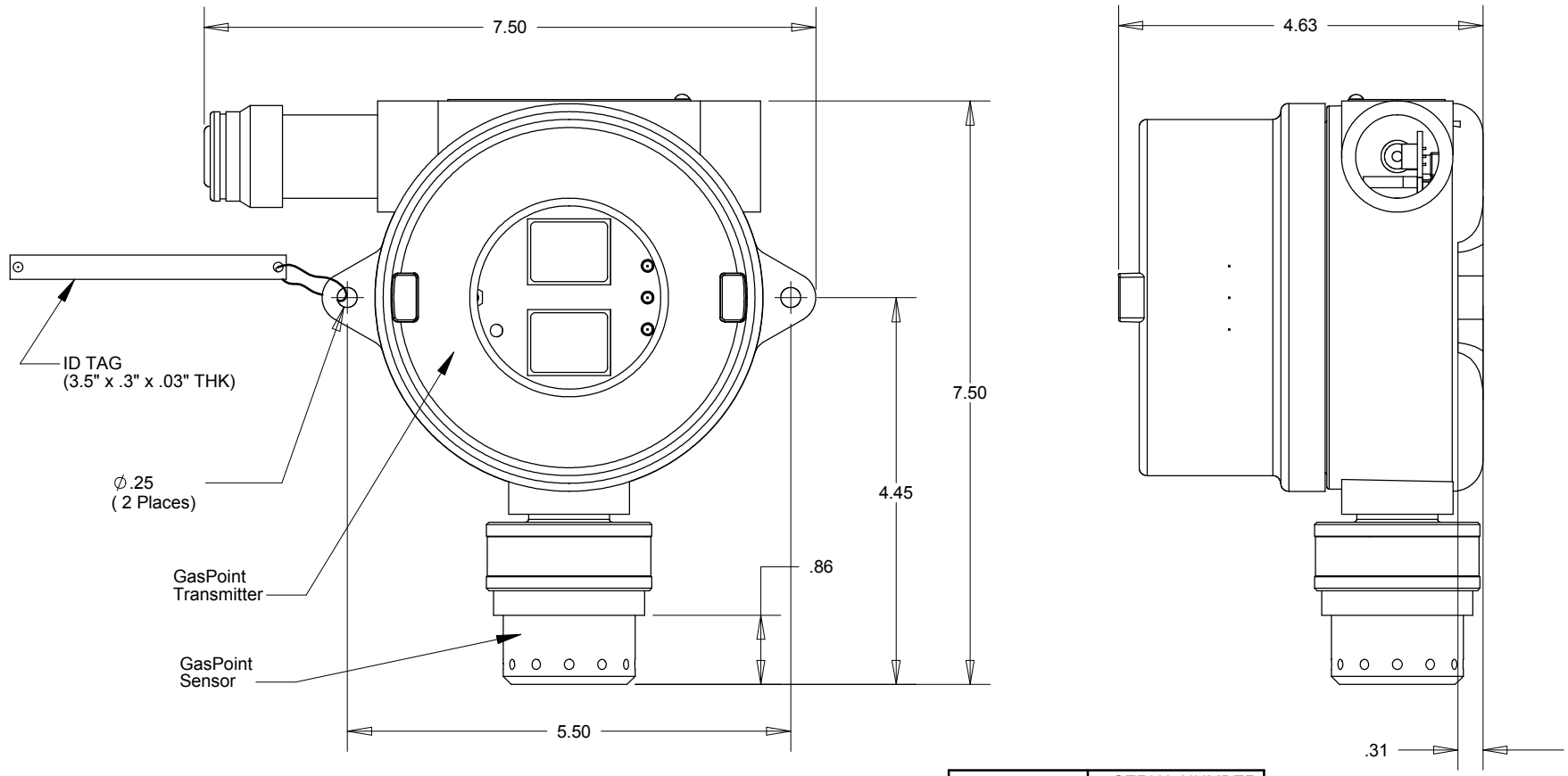

ID TAG	SERIAL NUMBER

REV.	DATE	PART #	DESCRIPTION
01	Jan. 30/02		Preliminary design

DATE
APPROVED

BIG TOOLBOX DESIGN CALGARY, ALBERTA

GasPoint Mounting Dimensions

FILE: GasPoint Mounting Drawing Custom.SLDDRW

DWG.#

DRAWN BY: MN

SCALE: NTS

SHEET:1 of 1